Piri Reis University

Evidence for THE Impact Ratings 2027 – Indicator 13.2.2

Low-carbon energy use – total energy used in 2025

Question: 13.2.2.1 Total energy used (GJ); 13.2.2.2 Total energy used from low-carbon sources (GJ).

Value: Total energy used: 34,648 GJ; reported from low-carbon sources: 22,517 GJ (campus trigeneration plant) **Data year:** 2025

Summary

Piri Reis University measures all energy used on its campus every month, by source, under its ISO 50001 Energy Management System. The Directorate of Construction and Technical Affairs, which is responsible for the University's energy data, records purchased grid electricity, the natural gas used by the campus trigeneration (combined cooling, heat and power) plant and the plant's electricity output on form FR.BKM.32. Total energy used in 2025 was 34,648 GJ: grid electricity 12,131 GJ and trigeneration plant fuel (natural gas) 22,517 GJ. The Directorate reports the trigeneration plant's energy (22,517 GJ) as low-carbon energy, because on-site combined generation of electricity, heating and cooling uses the fuel far more efficiently than separate grid electricity and heat supply and avoids transmission losses. In 2025 the plant produced 2,536,440 kWh of electricity in addition to heat and cooling.

1. Energy used in 2025 by month

Month	Grid electricity (kWh)	Grid electricity (GJ)	Natural gas (m³)	Natural gas (GJ)	Total (GJ)
January	88,492.50	318.6	104,791	3,631.0	3,949.6
February	229,309.42	825.5	74,260	2,573.1	3,398.6
March	127,041.75	457.4	79,413	2,751.7	3,209.0
April	139,523.17	502.3	59,566	2,064.0	2,566.2
May	281,256.08	1,012.5	6,300	218.3	1,230.8
June	402,532.20	1,449.1	1,349	46.7	1,495.9
July	590,721.07	2,126.6	0	0.0	2,126.6
August	574,942.50	2,069.8	0	0.0	2,069.8
September	444,925.80	1,601.7	10,172	352.5	1,954.2
October	163,555.88	588.8	92,141	3,192.7	3,781.5
November	181,978.87	655.1	100,689	3,488.9	4,144.0
December	145,355.40	523.3	121,178	4,198.8	4,722.1
Total 2025	**3,369,634.64**	**12,130.7**	**649,859**	**22,517.6**	**34,648.3**

Source: FR.BKM.32 (first issued 15.09.2020), 2025 records. Conversion factors: 1 kWh = 0.0036 GJ; natural gas net calorific value 34.65 MJ/m³.

2. Campus energy monitoring system

All energy flows on campus are monitored in real time by the Energy Centre SCADA system operated by the Directorate of Construction and Technical Affairs: grid supply (TEDAŞ incoming cells), transformers, cogeneration generators and the distribution feeders to every building block.

Link: sustainability.pirireis.edu.tr – ISO 50001 Energy Management System

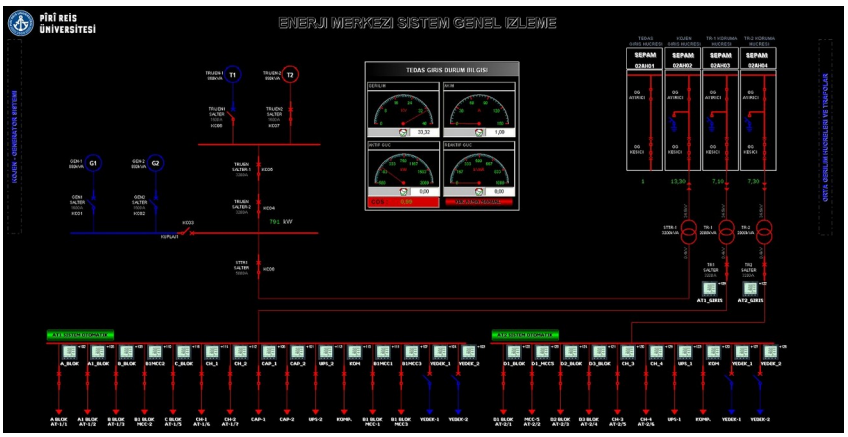

Energy Centre – system overview monitoring screen (grid supply, transformers, generators and building feeders)

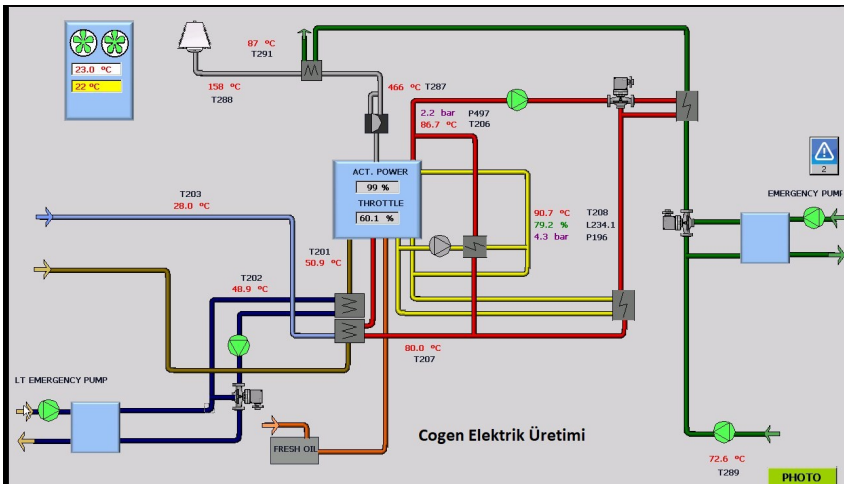

Cogeneration electricity production – monitoring screen

3. Method

- Total energy used includes all energy purchased by the University (grid electricity) and the fuel used on campus (natural gas for the trigeneration plant and boilers).
- Electricity and heat generated by the gas-fired trigeneration plant are not added again, to avoid double counting with the natural gas input.
- Low-carbon energy as reported by the Directorate of Construction and Technical Affairs: the energy used by the campus trigeneration plant, 649,859 m³ of natural gas = 22,517 GJ, classified as low-carbon on the basis of high-efficiency on-site combined cooling, heat and power generation (2025 electricity output 2,536,440 kWh). The plant is fuelled by natural gas.